REV.	Q'TY	ECN. NO.	REASON&CONTENTS	SIGN	DATE
			New release.	Bull.pan	2017.03.09

Model No.	PJ30930-Q
Schematic	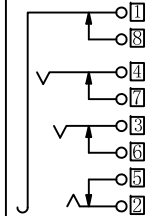

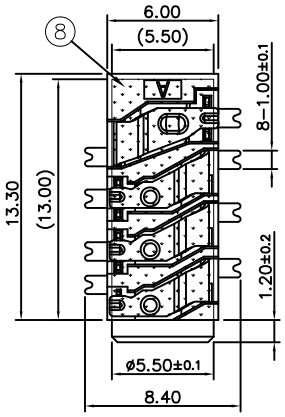

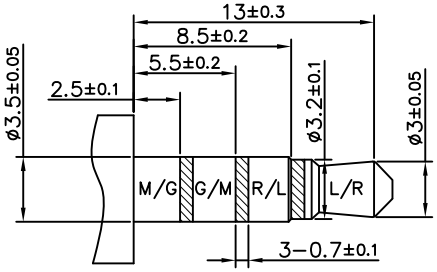

RECOMMENDED PLUG
ø3.5 4-POLE STANDARD PLUG

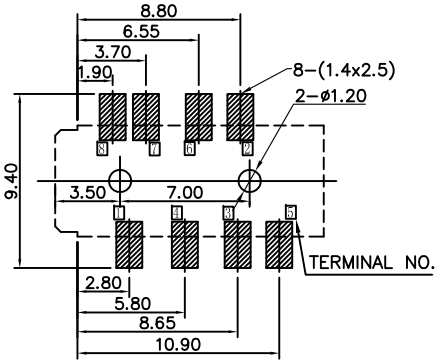

PCB HOLES(TOP VIEW) t=1.6mm
NOTE: GENERAL TOLERANCE: ±0.05mm

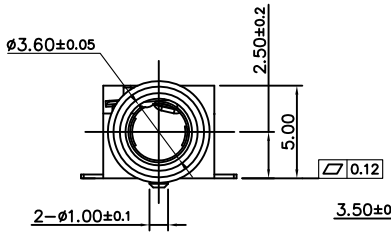

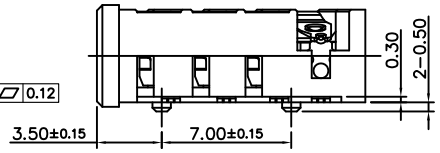

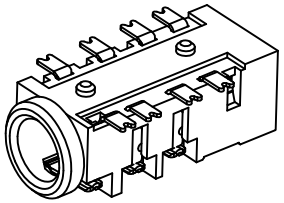

Specification:
1. Rating : DC 30V 0.5A.
2. Contact resistance: ≤50mΩ.
   After life test:≤100mΩ.
3. Insulation resistance: ≥100MΩ (500VDC).
   After life test:≥50MΩ.
4. Withstand voltage: 500VAC.
5. Insertion and extraction force:
   10N～25N(Initial).
   3N～25N(After Life Test).
6. life test: 5000cycles min.
7. Operation temperature range:-20℃～70℃.
8. Preservative temperature range:-40℃～85℃.

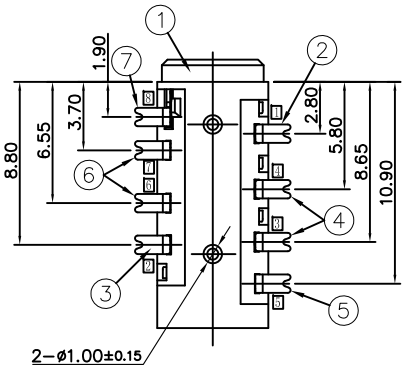

NO.	DESCRIPTION	QTY	MATERIAL	REMARK
⑧	MYLAR	1	Polyimide	---
⑦	SHUNT TERMINAL 8	1	Phosphor bronze t=0.20	Silver plating
⑥	SHUNT TERMINAL 6 7	2	Phosphor bronze t=0.20	
⑤	SHUNT TERMINAL 5	1	Phosphor bronze t=0.20	
④	RING SPRING 3 4	2	Stainless steel t=0.20	
③	TIP SPRING 2	1	Stainless steel t=0.20	
②	Earth spring 1	1	Stainless steel t=0.20	
①	Housing	1	HIGH TEMP. THERMOPLASTIC	BLACK

THIS DOCUMENT IS THE SOLE PROPERTY OF Bsun ELECTRONICS CO., LTD. AND SHOULD NOT BE USED IN WHOLE OR INPART WITHOUT PRIOR WRITTEN PERMISSION.

UNIT:MM

TOLERANCE	
DIMENSIONS	ANGLES
.X ±0.50	X ±5°
.XX ±0.30	.X ±3°
.XXX±0.15	.XX ±2°

TYPE: ø3.5 PHONE JACK

MODEL NO: PJ30930-Q

DRAWING TYPE: CUSTOMER DRAWING

DRAWING No: BSCR-0000-****

SCALE: N/A | VER.: 01 | PAGE: 1/1

DESIGNER BY:
CHECK BY:
APPROVED BY:

丞永實業有限公司
BLUE SOURCES ELECTRONICS CO,LTD.